VIKRAMADITYA ACADEMY

SAINIK SCHOOL • MILITARY SCHOOL • RIMC

RIMC

DEHRADUN

MATHS • DESCRIPTIVE PAPER

252 PAGES SOLVED

PAPERS 18

MATHS SOLUTIONS

18 RIMC Maths papers 2007–2017 — every question solved step by step

18	2007–17	252	Full
Papers	Years	Pages	Steps

Descriptive / written type · Exam-style working · Marks-wise answers

99919 18624

www.vikramadityacademy.com

Greater Faridabad · Palwal

VIKRAMADITYA ACADEMY
Sainik School • Military School • RIMC Coaching · Greater Faridabad

RIMC Maths — Descriptive Paper Complete Solutions

18 previous RIMC entrance Mathematics papers (2007–2017), every question solved step by step

#	Paper	Page
1	RIMC Entrance — Mathematics, December 2007	**4**
2	RIMC Entrance — Mathematics, December 2008	**13**
3	RIMC Entrance — Mathematics, June 2009	**28**
4	RIMC Entrance — Mathematics, June 2009 (Set 2)	**40**
5	RIMC Entrance — Mathematics, June 2010	**48**
6	RIMC Entrance — Mathematics, June 2010 (Part 2)	**59**
7	RIMC Entrance — Mathematics, December 2011	**67**
8	RIMC Entrance — Mathematics, June 2012	**85**
9	RIMC Entrance — Mathematics, December 2012	**96**
10	RIMC Entrance — Mathematics, June 2013	**112**
11	RIMC Entrance — Mathematics, December 2013	**131**
12	RIMC Entrance — Mathematics, June 2014	**147**
13	RIMC Entrance — Mathematics, December 2014	**161**
14	RIMC Entrance — Mathematics, June 2015	**178**
15	RIMC Entrance — Mathematics, June 2016	**192**
16	RIMC Entrance — Mathematics, December 2016	**207**
17	RIMC Entrance — Mathematics, June 2017	**223**
18	RIMC Entrance — Mathematics, December 2017	**241**

How to use this book: attempt each paper in 2 hours like the real exam, then compare your working line by line with the solution. RIMC Maths is a written (descriptive) paper — marks are given for steps,

so copy the method, not just the answer.

Solutions written by the faculty of Vikramaditya Academy. Question papers are previous-year RIMC entrance papers, reproduced for practice. Vikramaditya Academy is a private coaching institute and is not affiliated with RIMC or the Government of India.

RIMC ENTRANCE EXAMINATION – DECEMBER 2007

MATHEMATICS · SOLVED PAPER

Complete question paper with detailed step-by-step solutions · Vikramaditya Academy, Greater Faridabad

PART – A

Q.1 **Find 'm': $(\frac{2}{3})^{-3} \times (\frac{2}{3})^{8} = (\frac{4}{9})^{(m-1)/2}$**

Solution:

We have,

$\Rightarrow (\frac{2}{3})^{-3} \times (\frac{2}{3})^{8} = (\frac{2^2}{3^2})^{(m-1)/2}$

$\because a^m \times a^n = a^{m+n}$

$\Rightarrow (\frac{2}{3})^{-3+8} = (\frac{2}{3})^{2 \times (m-1)/2}$

$\Rightarrow (\frac{2}{3})^{5} = (\frac{2}{3})^{m-1}$

$\because a^m = a^n \Rightarrow m = n$

$\Rightarrow 5 = m - 1$

$\Rightarrow 5 + 1 = m$

$\Rightarrow m = 6$

m = 6

Q.2 **A dealer makes a profit of 20% on the sale of a car. Express the S.P. as a fraction of the C.P.**

Solution:

Let the C.P. of the car = x

So, profit % = 20%

Then, we know that SP = $\frac{CP \times (100 + P\%)}{100}$

S.P. = $\frac{x \times 120}{100}$

S.P. = $\frac{120x}{100}$

S.P. = $\frac{12x}{10} = \frac{6x}{5}$

Now, we have to express the S.P. as a fraction of C.P.

So, $\frac{S.P.}{C.P.} = \frac{6x}{5} \div x = \frac{6}{5}$

(Equivalently, $\frac{C.P.}{S.P.} = \frac{5}{6}$.)

Hence S.P. = $\frac{6}{5}$ of the C.P.

Q.3 Three interior angles of a Δ are in the ratio 1 : $\frac{2}{3}$: $\frac{5}{3}$. Find the angles.

Solution:

Ratio of interior angles = 1 : $\frac{2}{3}$: $\frac{5}{3}$

Let the first angle = 1x

Second angle = $\frac{2}{3}$x

Third angle = $\frac{5}{3}$x

Then, we know that the sum of all angles in a Δ is 180°.

$\Rightarrow 1x + \frac{2}{3}x + \frac{5}{3}x = 180°$

$\Rightarrow x + \frac{7x}{3} = 180$

$\Rightarrow \frac{3x + 7x}{3} = 180$

$\Rightarrow \frac{10x}{3} = 180$

$\Rightarrow x = \frac{180 \times 3}{10}$

$\Rightarrow x = 54$

Hence the angles are:

1st = x = 54°

2nd = $\frac{2}{3}x = \frac{2}{3} \times 54 = 36°$

3rd = $\frac{5}{3}x = \frac{5}{3} \times 54 = 90°$

The angles are 54°, 36° and 90°.

Q.4 If x = 2, y = 3, find: (i) $x^{-2} - y^{-3}$ (ii) $x^y - y^x$

Solution:

(i) $\Rightarrow (2)^{-2} - (3)^{-3}$

$\because (a)^{-m} = (\frac{1}{a})^m$

$\Rightarrow (\frac{1}{2})^2 - (\frac{1}{3})^3$

$\Rightarrow \frac{1}{4} - \frac{1}{27}$

$\Rightarrow \frac{27 - 4}{108}$

$\Rightarrow \frac{23}{108}$

(i) $\frac{23}{108}$

(ii) $\Rightarrow x^y - y^x$

$\Rightarrow 2^3 - 3^2$

$\Rightarrow 8 - 9$

$\Rightarrow -1$

(ii) −1

Q.5 Simplify: $(2x + 1)^2 - (2x + 1)(2x - 1)$

Solution:

$\Rightarrow (2x + 1)^2 - (2x + 1)(2x - 1)$

$\because (a + b)(a - b) = a^2 - b^2$

$\Rightarrow (2x + 1)^2 - [(2x)^2 - (1)^2]$

$\because (a + b)^2 = a^2 + b^2 + 2ab$

$\Rightarrow (2x)^2 + 1^2 + 2 \times 2x \times 1 - (4x^2 - 1)$

$\Rightarrow 4x^2 + 1 + 4x - 4x^2 + 1$

$\Rightarrow 4x + 2$

4x + 2

Q.6 Find the rational number: $(-\frac{8}{9} - \frac{11}{4}) - (-\frac{4}{12})$

Solution:

$\Rightarrow (-\frac{8}{9} - \frac{11}{4}) - (-\frac{4}{12})$

$\Rightarrow (-\frac{8}{9} - \frac{11}{4}) + \frac{4}{12}$

$\Rightarrow (\frac{-32 - 99}{36}) + \frac{4}{12}$

$\Rightarrow \frac{-131}{36} + \frac{4}{12}$

$\Rightarrow \frac{-131 + 12}{36}$

$\Rightarrow \frac{-119}{36}$

$\frac{-119}{36}$

Q.7 Simplify: $[(\frac{2}{3})^2]^3 \times (\frac{1}{3})^{-2} \times 3^{-1} \times \frac{1}{6}$

Solution:

We have,

$\because (a^m)^n = a^{m \times n}$ and $a^{-m} = (\frac{1}{a})^m$

$\Rightarrow (\frac{2}{3})^6 \times (\frac{1}{3})^{-2} \times \frac{1}{3} \times \frac{1}{6}$

$\because a^m \times a^n = a^{m+n}$

$\Rightarrow (\frac{2}{3})^6 \times (\frac{1}{3})^{-1} \times \frac{1}{6}$

$\Rightarrow \frac{64}{729} \times 3 \times \frac{1}{6}$

$= \frac{32}{729}$

$\frac{32}{729}$

Q.8 Find 'a' if $pqa = (3p + q)^2 - (3p - q)^2$

Solution:

$\Rightarrow pqa = (3p + q)^2 - (3p - q)^2$

$\because a^2 - b^2 = (a + b)(a - b)$

$\Rightarrow pqa = (3p + q - 3p + q)(3p + q + 3p - q)$

$\Rightarrow pqa = 2q \times 6p$

$\Rightarrow pqa = 12pq$

$\Rightarrow a = 12$

Hence the value of a is 12.

Q.10 Factorise: (a) $(25a^2 + c^2 + 10ac) - 49b^2$ (b) $(ab + a) + b + 1$

Solution:

(a) $\Rightarrow [(5a)^2 + c^2 + 10ac] - (7b)^2$

$\because a^2 + b^2 + 2ab = (a + b)^2$

$\Rightarrow (5a + c)^2 - (7b)^2$

$\because a^2 - b^2 = (a + b)(a - b)$

(a) (5a + c − 7b)(5a + c + 7b)

(b) $\Rightarrow (ab + a) + b + 1$

$\Rightarrow a(b + 1) + (b + 1)$

$\Rightarrow (b + 1)(a + 1)$

(b) (b + 1)(a + 1)

Q.11 Arrange the following in descending order: $\frac{5}{6}, \frac{4}{5}, \frac{2}{3}, \frac{3}{2}, \frac{1}{3}$

Solution:

We have, $\Rightarrow \frac{5}{6}, \frac{4}{5}, \frac{2}{3}, \frac{3}{2}, \frac{1}{3}$

L.C.M. of 6, 5, 3, 2, 3 = 2 × 3 × 5 = 30

So, $\Rightarrow \frac{5 \times 5}{6 \times 5}, \frac{4 \times 6}{5 \times 6}, \frac{2 \times 10}{3 \times 10}, \frac{3 \times 15}{2 \times 15}, \frac{1 \times 10}{3 \times 10}$

$\Rightarrow \frac{25}{30}, \frac{24}{30}, \frac{20}{30}, \frac{45}{30}, \frac{10}{30}$

Comparing numerators: 45 > 25 > 24 > 20 > 10

Descending order: $\frac{3}{2}, \frac{5}{6}, \frac{4}{5}, \frac{2}{3}, \frac{1}{3}$

Q.12 If the volume of a cube is 729 m^3, find its T.S.A.

Solution:

We have,

Volume of the cube = 729 m^3

So, volume of cube = $(side)^3$

So, $(side)^3$ = 729 m^3

Side = $\sqrt[3]{729}$ m

Side = 9 m

Then, T.S.A. of cube = 6 × $(side)^2$

= 6 × $(9)^2$

= 6 × 81

= 486 m^2

Hence the T.S.A. of the cube is 486 m^2.

Q.13 If the square of the hypotenuse of an isosceles right-angled triangle is 200 m^2, find the length of each side.

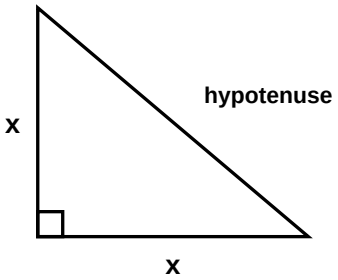

Solution:

We have, it is an isosceles Δ.

So, the base and perpendicular will be equal.

So, let the base and perpendicular = x

Hypotenuse square = 200 m^2

Now, by using Pythagoras theorem:

$(\text{Hypotenuse})^2 = (\text{Base})^2 + (\text{Perpendicular})^2$

$\Rightarrow 200 = (x)^2 + (x)^2$

$\Rightarrow 200 = 2x^2$

$\Rightarrow x^2 = 100$

$\Rightarrow x = \sqrt{100}$

$\Rightarrow x = 10$ m

So, the base and perpendicular = 10 m each.

Then, $(\text{Hypotenuse})^2 = 200\ m^2$

Hypotenuse = $\sqrt{200}$ m = $10\sqrt{2}$ m

Each equal side = 10 m and hypotenuse = $10\sqrt{2}$ m.

Q.14 If a : b = 2 : 3 and b : c = 4 : 5, find a : b : c.

Solution:

We have,

$\Rightarrow a : b = 2 : 3 \Rightarrow \frac{a}{b} = \frac{2}{3}$

Then, $b : c = 4 : 5 \Rightarrow \frac{b}{c} = \frac{4}{5}$

So, L.C.M. of 3 and 4 (the two values of b) = 12

So, $\frac{a}{b} = \frac{2 \times 4}{3 \times 4} = \frac{8}{12}$

$\frac{b}{c} = \frac{4 \times 3}{5 \times 3} = \frac{12}{15}$

Here b is equal (12) in both.

So, a : b : c = 8 : 12 : 15

a : b : c = 8 : 12 : 15

PART – B

Q.(b) Divide: $6a^3 + 5a^2 + 5a + 12$ by $3a + 4$

Solution:

$6a^3 \div 3a = 2a^2$; $2a^2(3a + 4) = 6a^3 + 8a^2$; subtracting: $-3a^2 + 5a$

$-3a^2 \div 3a = -a$; $-a(3a + 4) = -3a^2 - 4a$; subtracting: $9a + 12$

$9a \div 3a = 3$; $3(3a + 4) = 9a + 12$; subtracting: 0

Hence quotient = $2a^2 - a + 3$ (remainder 0).

Q.24 **The volume of a metallic cylindrical pipe is 748 cm^3. Its length is 14 cm and its external radius is 9 cm. Find its thickness.**

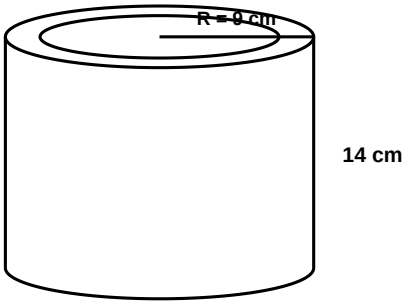

Solution:

(The value printed in the source copy reads 784 cm^3; with 784 the inner radius is not a whole number. The intended value is 748 cm^3, which gives the working below.)

We have,

Volume of the cylindrical pipe = 748 cm^3

Height (length) of the pipe = 14 cm

External radius R = 9 cm

Let the internal radius = r

So, we know that, volume of hollow cylinder = $\pi h(R^2 - r^2)$

So, $\frac{22}{7} \times 14 \times (9^2 - r^2) = 748$

$\Rightarrow 14 \times (9^2 - r^2) = \frac{748 \times 7}{22}$

$\Rightarrow 9^2 - r^2 = \frac{748 \times 7}{14 \times 22}$

$\Rightarrow 9^2 - r^2 = \frac{748}{2 \times 22}$

$\Rightarrow 81 - r^2 = 17$

$\Rightarrow -r^2 = 17 - 81$

$\Rightarrow -r^2 = -64$

$\Rightarrow r^2 = 64$

$\Rightarrow r = \sqrt{64}$

$\Rightarrow r = 8$ cm

Thickness of the pipe = R − r = 9 − 8 = 1 cm

Hence the thickness of the pipe is 1 cm.

Q.27 **The following table shows the population of a town by age group. (a) Express the number of persons in the oldest age group as a percentage of the number in the youngest age group. (b) Find the total population of the town.**

Solution:

(The question text is not visible in the source copy; it is restored from the working.)

Age group (years)	No. of persons
0.5 – 14.5	1400
15.5 – 29.5	1200
30.5 – 44.5	1100
45.5 – 59.5	1000
60.5 – 74.5	950
75.5 – 89.5	300

(a) Persons in the youngest age group (0.5 – 14.5) = 1400

Persons in the oldest age group (75.5 – 89.5) = 300

Now, required percentage = $\frac{\text{Oldest age group}}{\text{Youngest age group}} \times 100$

So, = $\frac{300}{1400} \times 100$

= $\frac{150}{7}\%$

= $21\frac{3}{7}\% \approx 21.4\%$

(a) $21\frac{3}{7}\%$ (≈ 21.4%)

(b) Total population of the town = 1400 + 1200 + 1100 + 1000 + 950 + 300

= 5950

(b) Hence the total population is 5,950.

Q.28 The base of an isosceles Δ is 12 cm and its perimeter is 32 cm. Find its area.

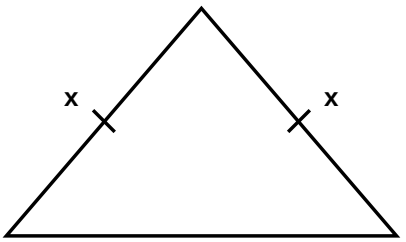

Solution:

We have,

Perimeter of the Δ = 32 cm

Base of the Δ = 12 cm

∵ It is an isosceles Δ.

So, let the equal sides = x

So, perimeter of isosceles Δ = sum of all sides

So, $x + x + 12 = 32$

$\Rightarrow 2x + 12 = 32$

$\Rightarrow 2x = 32 - 12$

$\Rightarrow 2x = 20$

$\Rightarrow x = 10$ cm

Now, the sides are 10 cm, 10 cm and 12 cm.

Then, we know that area of $\Delta = \sqrt{s(s-a)(s-b)(s-c)}$

Here $s = \frac{a+b+c}{2}$, and a, b and c are sides.

So, $s = \frac{12+10+10}{2} = 16$

Now, area of $\Delta = \sqrt{16(16-12)(16-10)(16-10)}$

$\Rightarrow \sqrt{16 \times 4 \times 6 \times 6}$

$\Rightarrow 4 \times 2 \times 6$

$\Rightarrow 48\ cm^2$

Hence the area of the Δ is 48 cm^2.